PROFESSIONAL DIGITAL TWO-WAY RADIOS

MOTOTRBO™ DP3441

NON DISPLAY PORTABLE

USER GUIDE

Contents

This User Guide contains all the information you need to use the MOTOTRBO DP3441 Digital Portable Radio.

Important Safety Information iv
RF Energy Exposure and Product Safety Guide for Portable Two-Way Radios iv

Firmware Version iv

Computer Software Copyrights v
Open Source Software Legal Notices v

Handling Precautions vi

Getting Started 1
How to Use This Guide 1
What Your Dealer/System Administrator Can Tell You 2

Preparing Your Radio for Use 3
Charging the Battery 3
Attaching the Battery 4
Attaching the Antenna 4
Attaching the Carry Holster 5
Attaching the Universal Connector Cover (Dust Cover) 5
Attaching the Accessory Connector 6
Powering Up the Radio 6
Adjusting the Volume 7

Identifying Radio Controls 8
Radio Controls 9
Programmable Buttons 10
Assignable Radio Functions 10
Assignable Settings or Utility Functions 11
Push-To-Talk (PTT) Button 12
Switching Between Conventional Analog and Digital Mode 13
IP Site Connect 13
Capacity Plus 14
Linked Capacity Plus 15

Identifying Status Indicators 16
LED Indicator 16
Audio Tones 17
Indicator Tones 18

Receiving and Making Calls 19
Selecting a Zone 19
Selecting a Channel 20
Receiving and Responding to a Radio Call 20
Receiving and Responding to a Group Call 21
Receiving and Responding to a Private Call 21
Receiving an All Call 23

Receiving and Responding to a Phone Call . . . 23
Phone Call as a Private Call or Group Call . . . 23
Phone Call as an All Call 24
Making a Radio Call 24
Making a Call with the Channel Selector Knob . . 25
Making a Group Call 25
Making a Private Call 25
Making a Selective Call 26
Making an All Call 27
Making a Phone Call with the Programmable Phone Button 27
Stopping a Radio Call 28
Talkaround 28
Monitoring Features 29
Monitoring a Channel 29
Permanent Monitor 29
Advanced Features 30
Scan Lists 30
Scan 31
Starting and Stopping Scan 31
Responding to a Transmission During a Scan . . 31
Deleting a Nuisance Channel 32
Restoring a Nuisance Channel 32
Vote Scan 32
Call Indicator Settings 33
Escalating Alarm Tone Volume 33
Call Alert Operation 33
Receiving and Responding to a Call Alert 33
Making a Call Alert with the One Touch Access Button 33
Emergency Operation 34
Sending an Emergency Alarm 34
Sending an Emergency Alarm with Call 35
Sending an Emergency Alarm with Voice to Follow 36
Reinitiating an Emergency Mode 37
Exiting an Emergency Mode 37
Privacy 37
Multi-Site Controls 38
Starting an Automatic Site Search 38
Stopping an Automatic Site Search 38
Starting a Manual Site Search 39
Lone Worker 39
Password Lock Features 40
Accessing the Radio from Password 40
Unlocking the Radio from Locked State 40
Bluetooth 41
Finding and Connecting to a Bluetooth Device . . 41
Disconnecting from a Bluetooth Device 42
Switching Audio Route 42

Auto-Range Transponder System (ARTS) 42
Over-the-Air Programming (OTAP) 43
Utilities 43
Setting the Squelch Level 43
Setting the Power Level 44
Turning the Voice Operating Transmission (VOX) Feature On or Off 44
Turning the Acoustic Feedback Suppressor Feature On or Off 44
Turning Radio Tones/Alerts On or Off 45
Checking the Battery Strength 45
Voice Announcement 45
GPS 45
Intelligent Audio 46

Batteries and Chargers Warranty 47

Limited Warranty 48

Important Safety Information

RF Energy Exposure and Product Safety Guide for Portable Two-Way Radios

ATTENTION!

This radio is restricted to occupational use only. Before using this product, read the RF Energy Exposure and Product Safety Guide for Portable Two-Way Radios which contains important operating instructions for safe usage and RF energy awareness and control for Compliance with applicable standards and regulation.

For a list of Motorola-approved antennas, batteries, and other accessories, visit the following website:

http://www.motorolasolutions.com

Firmware Version

All the features described in the following sections are supported by the radio's software version **R02.06.11.**

Check with your dealer or system administrator for more details for all the features supported.

Computer Software Copyrights

The Motorola products described in this manual may include copyrighted Motorola computer programs stored in semiconductor memories or other media. Laws in the United States and other countries preserve for Motorola certain exclusive rights for copyrighted computer programs including, but not limited to, the exclusive right to copy or reproduce in any form the copyrighted computer program. Accordingly, any copyrighted Motorola computer programs contained in the Motorola products described in this manual may not be copied, reproduced, modified, reverse-engineered, or distributed in any manner without the express written permission of Motorola. Furthermore, the purchase of Motorola products shall not be deemed to grant either directly or by implication, estoppel, or otherwise, any license under the copyrights, patents or patent applications of Motorola, except for the normal non-exclusive license to use that arises by operation of law in the sale of a product.

The AMBE+2™ voice coding Technology embodied in this product is protected by intellectual property rights including patent rights, copyrights and trade secrets of Digital Voice Systems, Inc.

This voice coding Technology is licensed solely for use within this Communications Equipment. The user of this Technology is explicitly prohibited from attempting to decompile, reverse engineer, or disassemble the Object Code, or in any other way convert the Object Code into a human-readable form.

U.S. Pat. Nos. #5,870,405, #5,826,222, #5,754,974, #5,701,390, #5,715,365, #5,649,050, #5,630,011, #5,581,656, #5,517,511, #5,491,772, #5,247,579, #5,226,084 and #5,195,166.

Open Source Software Legal Notices

This Motorola Product contains Open Source Software. For information regarding licenses, acknowledgements, required copyright notices, and other usage terms, refer to the Documentation for this Motorola Product at:

https://emeaonline.motorolasolutions.com

Handling Precautions

The MOTOTRBO Series Digital Portable radio meets IP67 specifications, allowing the radio to withstand adverse field conditions such as being submersed in water.

- If the radio has been submersed in water, shake the radio well to remove any water that may be trapped inside the speaker grille and microphone port. Trapped water could cause decreased audio performance.
- If the radio's battery contact area has been exposed to water, clean and dry battery contacts on both the radio and the battery before attaching the battery to the radio. The residual water could short-circuit the radio.
- If the radio has been submersed in a corrosive substance (e.g. saltwater), rinse the radio and battery in fresh water then dry the radio and battery.
- To clean the exterior surfaces of the radio, use a diluted solution of mild dishwashing detergent and fresh water (i.e. one teaspoon of detergent to one gallon of water).
- Never poke the vent (hole) located on the radio chassis below the battery contact. This vent allows for pressure equalization in the radio. Doing so may create a leak path into the radio and the radio's submersibility may be lost.
- Never obstruct or cover the vent, even with a label.
- Ensure that no oily substances come in contact with the vent.
- The radio with antenna attached properly is designed to be submersible to a maximum depth of 1 meter (3.28 feet) and a maximum submersion time of 30 minutes. Exceeding either maximum limit or use without antenna may result in damage to the radio.
- When cleaning the radio, do not use a high pressure jet spray on the radio as this will exceed the 1 meter depth pressure and may cause water to leak into the radio.

Caution Do not disassemble the radio. This could damage radio seals and result in leak paths into the radio. Radio maintenance should only be done in service depot that is equipped to test and replace the seal on the radio.

Getting Started

Take a moment to review the following:

How to Use This Guide . . . . . page 1
What Your Dealer/System Administrator Can Tell You . . . . . page 2

How to Use This Guide

This User Guide covers the basic operation of the MOTOTRBO Non-Display Portables.

However, your dealer or system administrator may have customized your radio for your specific needs. Check with your dealer or system administrator for more information.

Throughout this publication, the icons below are used to indicate features supported in either the conventional Analog mode or conventional Digital mode:

Indicates a conventional **Analog Mode-Only** feature.

Indicates a conventional **Digital Mode-Only** feature.

For features that are available in **both** Analog and Digital modes, **no** icon is shown.

For features that are available in a conventional multi-site mode, see ***IP Site Connect*** on *page 13* for more information.

Selected features are **also** available on the single-site trunking mode, Capacity Plus. See ***Capacity Plus*** on *page 14* for more information.

Selected features are also available in the multi-site trunking mode, Linked Capacity Plus. See ***Linked Capacity Plus*** on *page 15* for more information.

What Your Dealer/System Administrator Can Tell You

You can consult your dealer or system administrator about the following:

- Is your radio programmed with any preset conventional channels?
- Which buttons have been programmed to access other features?
- What optional accessories may suit your needs?
- What are the best radio usage practices for effective communication?
- What maintenance procedures will help promote longer radio life?

Preparing Your Radio for Use

Assemble your radio by following these steps:

Charging the Battery . . . . . page 3
Attaching the Battery . . . . . page 4
Attaching the Antenna . . . . . page 4
Attaching the Carry Holster . . . . . page 4
Attaching the Universal Connector Cover (Dust Cover) . . . . . page 5
Attaching the Accessory Connector . . . . . page 6
Powering Up the Radio . . . . . page 6
Adjusting the Volume. . . . . page 7

Charging the Battery

Your radio is powered by a Nickel Metal-Hydride (NiMH) or Lithium-Ion (Li-Ion) battery. To avoid damage and comply with warranty terms, charge the battery using a Motorola charger *exactly* as described in the charger user guide. It is recommended your radio remains powered off while charging.

Charge a new battery 14 to 16 hours before initial use for best performance.

IMPORTANT: **ALWAYS** charge your IMPRES battery with an IMPRES charger for optimized battery life and valuable battery data. IMPRES batteries charged exclusively with IMPRES chargers receive a 6-month capacity warranty extension over the standard Motorola Premium battery warranty duration.

Attaching the Battery

Fit the battery into the slots at the bottom of the radio and push the top of the battery down until the latch snaps into place.

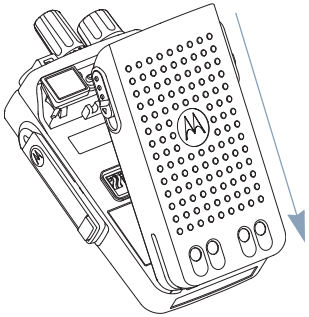

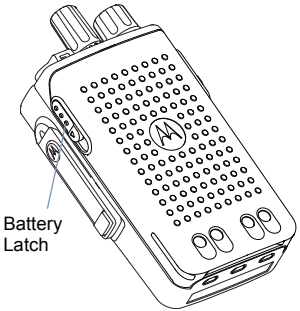

To remove the battery, turn the radio off. Move the battery latch into unlock position and hold.

Attaching the Antenna

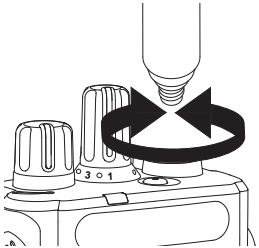

With the radio turned off, set the antenna in its receptacle and turn clockwise.

To remove the antenna, turn the antenna counterclockwise.

If antenna needs to be replaced, ensure that only MOTOTRBO antennas are used. Neglecting this will damage your radio. See ***Antennas*** on page 46 for a list of available antennas.

Attaching the Carry Holster

Align the rails on the carry holster with the grooves on the battery and press downwards until you hear a click.

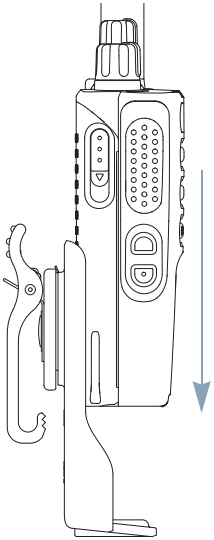

Attaching the Universal Connector Cover (Dust Cover)

The universal connector is located on the antenna side of the radio. It is used to connect MOTOTRBO accessories to the radio.

1. Insert the slanted end of the cover into the slots above the universal connector.
2. Press downwards on the cover to seat the dust cover properly on the Universal Connector.
3. Secure the dust cover to the radio by pushing the latch upwards.

To remove the dust cover, push the latch downwards. Lift the cover up and slide down the dust cover from the universal connector to remove it.

Replace the dust cover when the universal connector is not in use.

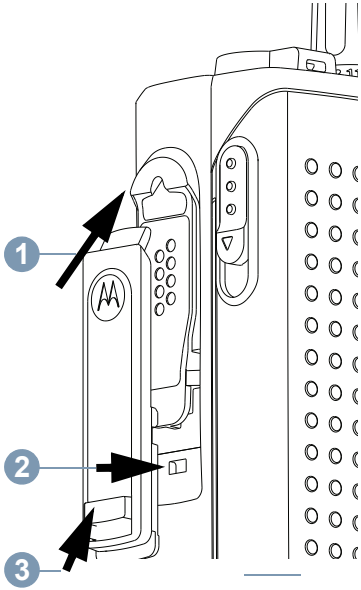

Attaching the Accessory Connector

The accessory connector is to be secured to the universal connector on the antenna side of the radio.

To attach the accessory connector,

1. Insert the slanted end into the slots above the universal connector.
2. Push connector upward.
3. Press downwards on the accessory connector until you hear a click.

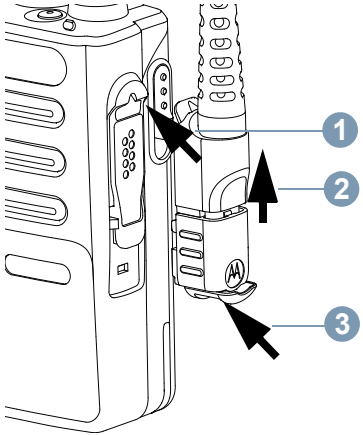

To remove the accessory connector,.

1. *Pull the connector latch outward.*
2. *Slide the connector downward.*
3. *Pull the connector outward.*

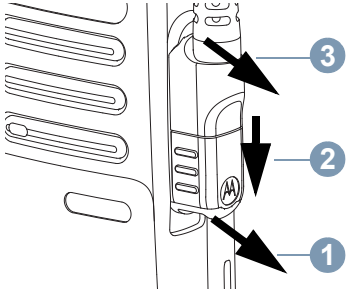

Powering Up the Radio

Rotate the **On/Off/Volume Control Knob** clockwise until you hear a click. The LED lights up solid green.

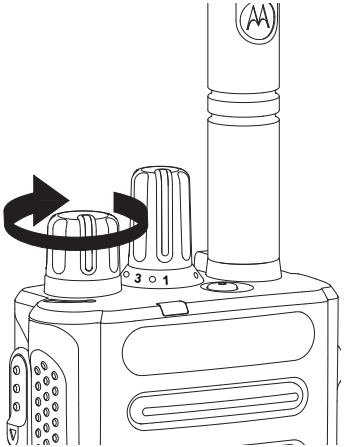

A brief tone sounds, indicating that the power up test is successful.There is no power up tone if the radio tones/alerts function is disabled (see ***Turning Radio Tones/Alerts On or Off*** on page 45).

If your radio does not power up, check your battery. Make sure that it is charged and properly attached. If your radio still does not power up, contact your dealer.

To turn off the radio, rotate this knob counterclockwise until you hear a click.

Adjusting the Volume

To increase the volume, turn the **On/Off/Volume Control Knob** clockwise.

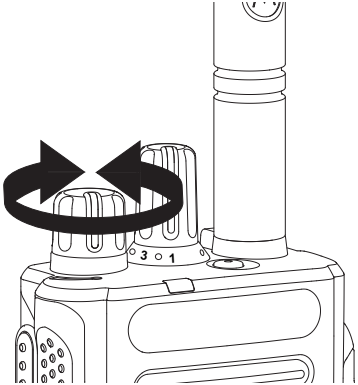

To decrease the volume, turn this knob counterclockwise.

NOTE: Your radio can be programmed to have a minimum volume offset where the volume level cannot be turned down fully. Check with your dealer or system administrator for more information.

Identifying Radio Controls

Take a moment to review the following:

Radio Controls . . . . . page 9
Programmable Buttons . . . . . page 10
Push-To-Talk (PTT) Button . . . . . page 12
Switching Between Conventional Analog and Digital Mode. . . . . page 13
IP Site Connect . . . . . page 13
Capacity Plus . . . . . page 14
Linked Capacity Plus. . . . . page 15

Radio Controls

1. Channel Selector Knob
2. On/Off/Volume Control Knob
3. LED Indicator
4. Push-to-Talk (**PTT**) Button
5. Side Button 1*
6. Side Button 2*
7. Microphone
8. Speaker
9. Universal Connector for Accessories
10. Emergency Button
11. Antenna

* *These buttons are programmable*

Programmable Buttons

Your dealer can program the programmable buttons as shortcuts to **radio functions** or **preset channels/groups** depending on the duration of a button press:

- Short press – Pressing and releasing rapidly.
- Long press – Pressing and holding for the programmed duration.
- Hold down – Keeping the button pressed.

NOTE: The programmed duration of a button press is applicable for all assignable radio/utility functions or settings. See ***Emergency Operation*** on page 34 for more information on the programmed duration of the **Emergency** button.

Assignable Radio Functions

Bluetooth®™ Audio Switch – Toggles audio routing between internal radio speaker and external Bluetooth-enabled accessory.

Bluetooth Connect – Initiates a Bluetooth find-and-connect operation.

Bluetooth Disconnect – Terminates all existing Bluetooth connections between your radio and any Bluetooth-enabled devices.

Bluetooth Discoverable – Enables your radio to enter Bluetooth Discoverable Mode.

Call Forwarding – Toggles Call Forwarding on or off.

Voice Announcement for Channel – Plays zone and channel announcement voice messages for the current channel. This function is unavailable when Voice Announcement is disabled.

Emergency – Depending on the programming, initiates or cancels an emergency alarm or call.

Intelligent Audio On/Off – Toggles Intelligent Audio on or off.

Manual Site Roam*‡ – Starts the manual site search.

Mic AGC On/Off – Toggles the internal automatic gain control (AGC) on or off. Not applicable during a Bluetooth session.

Monitor – Monitors a selected channel for activity.

Nuisance Channel Delete*‡ – Temporarily removes an unwanted channel, except for the Selected Channel, from the scan list. The Selected Channel refers to the user's selected zone/channel combination from which scan is initiated.

Notifications – Provides direct access to the Notifications List.

One Touch Access – Directly initiates a predefined Private, Phone or Group Call, a Call Alert.

** Not applicable in Capacity Plus*
‡ Not applicable in Linked Capacity Plus

Permanent Monitor*‡– Monitors a selected channel for all radio traffic until function is disabled.

Privacy – Toggles privacy on or off.

Phone – Provides direct access to the Phone Contacts list.

Phone Exit – Ends the current Phone Call.

Repeater/Talkaround*‡ – Toggles between using a repeater and communicating directly with another radio.

Scan* – Toggles scan on or off.

Site Lock On/Off*‡ – Toggles the automatic site roam on or off.

Transmit Interrupt Remote Dekey – Stops an ongoing interruptible call to free the channel.

Voice Announcement On/Off – Toggles Voice Announcement on or off.

Voice Operating Transmission (VOX) – Toggles VOX on or off.

Zone – Allows selection from only one zone.

Battery Strength – Indicates battery strength via the LED Indicator (see ***Checking the Battery Strength*** on page 45).

** Not applicable in Capacity Plus*
‡ Not applicable in Linked Capacity Plus

Assignable Settings or Utility Functions

All Tones/Alerts – Toggles all tones and alerts on or off.

Power Level – Toggles transmit power level between high and low.

Squelch – Toggles squelch level between tight and normal.

Push-To-Talk (PTT) Button

The **PTT** button on the side of the radio serves two basic purposes:

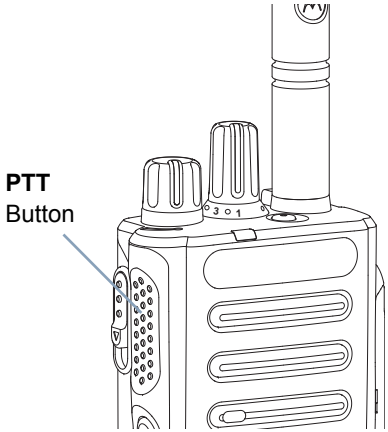

- While a call is in progress, the **PTT** button allows the radio to transmit to other radios in the call.

  Press and hold down **PTT** button to talk. Release the **PTT** button to listen.

  The microphone is activated when the **PTT** button is pressed.
- While a call is not in progress, the **PTT** button is used to make a new call (see ***Making a Radio Call*** on page 24).

*Depending on programming, if the Talk Permit Tone or the **PTT** Sidetone is enabled, wait until the short alert tone ends before talking.*

*During a call, if the Channel Free Indication feature is enabled on your radio (programmed by your dealer), you will hear a short alert tone the moment the target radio (the radio that is receiving your call) releases the **PTT** button, indicating the channel is free for you to respond.*

You will also hear a continuous talk prohibit tone, if your call is interrupted, indicating that you should release the PTT button, for example when the radio receives an Emergency Call.

Switching Between Conventional Analog and Digital Mode

Each channel in your radio can be configured as a conventional analog or conventional digital channel. Use the Channel Selector Knob to switch between an analog or a digital channel.

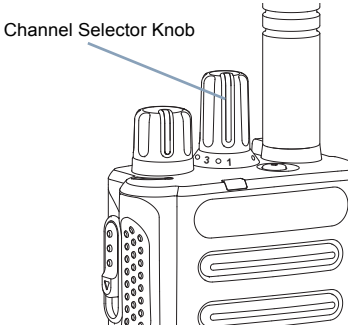

When switching from digital to analog mode, certain features are unavailable.

Your radio also has features available in both analog and digital mode. However, the minor differences in the way each feature works does **NOT** affect the performance of your radio.

NOTE: Your radio also switches between digital and analog modes during a dual mode scan (see ***Scan*** on page 31).

IP Site Connect

This feature allows your radio to extend conventional communication beyond the reach of a single site, by connecting to different available sites which are connected via an Internet Protocol (IP) network.

NOTE: This feature is not applicable in Capacity Plus.

When the radio moves out of range from one site and into the range of another, it connects to the new site's repeater to send or receive calls/data transmissions. Depending on your settings, this is done automatically or manually.

If the radio is set to do this automatically, it scans through all available sites when the signal from the current site is weak or when the radio is unable to detect any signal from the current site. It then locks on to the repeater with the strongest Received Signal Strength Indicator (RSSI) value.

In a manual site search, the radio searches for the next site in the roam list that is currently in range (but which may not have the strongest signal) and locks on to it.

NOTE: Each channel can only have either Scan or Roam enabled, not both at the same time.

Channels with this feature enabled can be added to a particular roam list. The radio searches the channel(s) in the Members roam list during the automatic roam operation to locate the best site.

A Members roam list supports a maximum of 16 channels (including the Selected Channel).

You cannot manually add or delete an entry to the Members roam list. A Software License Key sold separately is required to use this feature.

Check with your dealer or system administrator for more information.

Capacity Plus

Capacity Plus is a single-site trunking configuration of the MOTOTRBO radio system, which uses a pool of channels to support hundreds of users and up to 254 Groups. This feature allows your radio to efficiently utilize the available number of programmed channels while in Repeater Mode.

You can only access channel(s) with Capacity Plus via the Channel Selector Knob, while features supported in Capacity Plus can be accessed via a programmable button press.

You will hear a negative indicator tone if you access a feature not applicable to Capacity Plus via a programmable button press.

Your radio also has features that are available in both conventional digital mode and Capacity Plus. However, the minor differences in the way each feature works does **NOT** affect the performance of your radio.A Software License Key sold separately is required to use this feature.

Check with your dealer or system administrator for more information on this system.

Linked Capacity Plus

Linked Capacity Plus is a multi-site multi-channel trunking configuration of the MOTOTRBO radio system, combining the best of both Capacity Plus and IP Site Connect configurations.

Linked Capacity Plus allows your radio to extend trunking communication beyond the reach of a single site, by connecting to different available sites which are connected via an Internet Protocol (IP) network. It also provides an increase in capacity by efficiently utilizing the combined available number of programmed channels supported by each of the available sites.

When the radio moves out of range from one site and into the range of another, it connects to the new site's repeater to send or receive calls/data transmissions. Depending on your settings, this is done automatically or manually.

If the radio is set to do this automatically, it scans through all available sites when the signal from the current site is weak or when the radio is unable to detect any signal from the current site. It then locks on to the repeater with the strongest Received Signal Strength Indicator (RSSI) value.

In a manual site search, the radio searches for the next site in the roam list that is currently in range (but which may not have the strongest signal) and locks on to it.

Any channel with Linked Capacity Plus enabled can be added to a particular roam list. The radio searches these channels during the automatic roam operation to locate the best site.

NOTE: You cannot manually add or delete an entry to the roam list. Check with your dealer or system administrator for more information.

Similar to Capacity Plus, icons of features not applicable to Linked Capacity Plus are not available in the menu. You hear a negative indicator tone if you try to access a feature not applicable to Linked Capacity Plus via a programmable button press. A Software License Key sold separately is required to use this feature

Check with your dealer or system administrator for more information on this configuration.

Identifying Status Indicators

Your radio indicates its operational status through the following:

LED Indicator . . . . . page 16
Audio Tones . . . . . page 17
Indicator Tones . . . . . page 18

LED Indicator

The LED indicator shows the operational status of your radio.

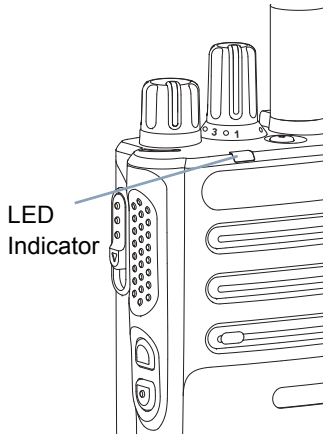

Blinking red – Radio is transmitting at low battery condition, receiving an emergency transmission or has failed the self-test upon powering up, or has moved out of range if radio is configured with Auto-Range Transponder System.

Solid yellow – Radio is monitoring a conventional channel or in Bluetooth Discoverable Mode. Also indicates fair battery charge when **Battery Strength** button is pressed.

Blinking yellow – Radio is scanning for activity or receiving a Call Alert, or all local Linked Capacity Plus channels are busy.

Rapidly blinking yellow – Radio is actively searching for a new site.

Double blinking yellow – Radio is no longer connected to the repeater while in Capacity Plus or Linked Capacity Plus, all Capacity Plus channels and Linked Capacity Plus channels are currently busy, Auto Roaming is enabled, radio is actively searching for a new site. Also indicates radio has yet to respond to a group call alert, or radio is locked.

Solid green – Radio is powering up or transmitting. Also indicates full charge of the battery when Battery Strength button is pressed.

Blinking green – Radio is receiving a non-privacy-enabled call or data, detecting activity or retrieving Over-the-Air Programming transmissions over the air.

Double blinking green – Radio is receiving a privacy-enabled call or data.

NOTE: While in conventional mode, when the LED blinks green, it indicates the radio detects activity over the air. Due to the nature of the digital protocol, this activity may or may not affect the radio's programmed channel.

For Capacity Plus and Linked Capacity Plus, there is no LED indication when the radio is detecting activity over the air.

Audio Tones

Alert tones provide you with audible indications of the radio's status or the radio's response to data received.

Continuous Tone	A monotone sound. Sounds continuously until termination.
Periodic Tone	Sounds periodically depending on the duration set by the radio. Tone starts, stops, and repeats itself.
Repetitive Tone	A single tone that repeats itself until it is terminated by the user.
Momentary Tone	Sounds only once for a short period of time defined by the radio.

Indicator Tones

High pitched tone ☐ Low pitched tone ■

Positive Indicator Tone

Negative Indicator Tone

Receiving and Making Calls

Once you understand how your MOTOTRBO Portable is configured, you are ready to use your radio.

Use this navigation guide to familiarize yourself with the basic Call features:

Selecting a Zone . . . . . page 20
Selecting a Channel . . . . . page 20
Receiving and Responding to a Radio Call . . . . . page 20
Making a Radio Call . . . . . page 24
Stopping a Radio Call . . . . . page 28
Talkaround . . . . . page 28
Monitoring Features. . . . . page 29

Selecting a Zone

A zone is a group of channels. Your radio supports up to 32 channels and 2 zones, with a maximum of 16 channels per zone.

Procedure:

1. Press the programmed **Zone** button.
2. You hear a positive indicator tone, indicating the radio has switched from Zone 1 to Zone 2.
   OR
   You hear a negative indicator tone, indicating the radio has switched from Zone 2 to Zone 1.

Selecting a Channel

Transmissions are sent and received on a channel. Depending on your radio's configuration, each channel may have been programmed differently to support different groups of users or supplied with different features. After selecting the relevant Zone, select the relevant channel you require to transmit or receive on.

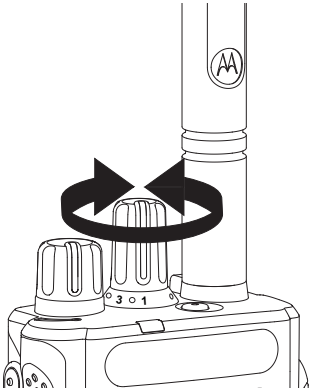

Procedure:

Once the required zone is set (if you have multiple zones in your radio), turn the **Channel Selector Knob** to select the number that represents the channel, subscriber ID, or group ID.

Receiving and Responding to a Radio Call

Once the channel, subscriber ID, or group ID is set, you can proceed to receive and respond to calls.

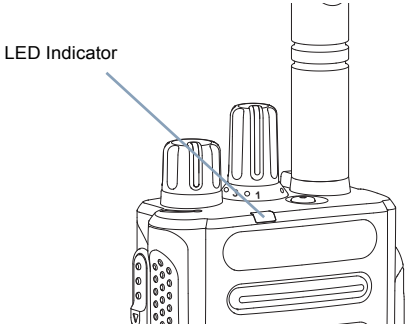

The LED lights up solid green while the radio is transmitting and blinks when the radio is receiving.

NOTE: The LED lights up solid green while the radio is transmitting and double blinks green when the radio is receiving a privacy-enabled call.

To unscramble a privacy-enabled call, your radio must have the same Privacy Key, OR the same Key Value and Key ID (programmed by your dealer) as the transmitting radio (the radio you are receiving the call from).

See **Privacy** on page 37 for more information.

Receiving and Responding to a Group Call

To receive a call from a group of users, your radio must be configured as part of that group.

1. The LED blinks green. Your radio unmutes and the incoming call sounds through the radio's speaker.
2. To respond, hold the radio vertically 1 to 2 inches (2.5 to 5.0 cm) from your mouth.
3. If the Channel Free Indication feature is enabled, you will hear a short alert tone the moment the transmitting radio releases the **PTT** button, indicating the channel is free for you to respond.
   Press the **PTT** button to respond to the call.
   OR
   If the Voice Interrupt feature is enabled, press the **PTT** button to stop the current call from the transmitting radio and free the channel for you to talk/respond.
4. The LED lights up solid green.
5. Wait for the Talk Permit Tone to finish (if enabled) and speak clearly into the microphone.
   OR
   Wait for the **PTT** Sidetone to finish (if enabled) and speak clearly into the microphone.
6. Release the **PTT** button to listen.
7. If there is no voice activity for a predetermined period of time, the call ends.

*See **Making a Group Call** on page 25 for details on making a Group Call.*

Receiving and Responding to a Private Call

A Private Call is a call from an individual radio to another individual radio.

Procedure:

When you receive a private call:

1. The LED blinks green. Your radio unmutes and the incoming call sounds through the radio's speaker.
2. To respond, hold the radio vertically 1 to 2 inches (2.5 to 5.0 cm) from your mouth.
3. If the Channel Free Indication feature is enabled, you will hear a short alert tone the moment the transmitting radio releases the **PTT** button, indicating the channel is free for you to respond.
   Press the **PTT** button to respond to the call.
   OR

If the Voice Interrupt feature is enabled, press the **PTT** button to stop the current call from the transmitting radio and free the channel for you to talk/respond.

4 Press the **PTT** button to respond to the call. The LED lights up solid green.

5 Wait for the Talk Permit Tone to finish (if enabled) and speak clearly into the microphone.

6 Release the **PTT** button to listen.

7 If there is no voice activity for a predetermined period of time, the call ends.

8 You hear a short tone.

*See **Making a Private Call** on page 25 for details on making a Private Call.*

Receiving and Responding to a Selective Call

A Selective Call is a call from an individual radio to another individual radio. It is a Private Call on an analog system.

Procedure:

When you receive a Selective Call:

1 The LED blinks green. Your radio unmutes and the incoming call sounds through the radio's speaker.

2 To respond, hold the radio vertically 1 to 2 inches (2.5 to 5.0 cm) from your mouth.

3 If the Channel Free Indication feature is enabled, you will hear a short alert tone the moment the transmitting radio releases the **PTT** button, indicating the channel is free for you to respond.
Press the **PTT** button to respond to the call.

4 Press the **PTT** button to respond to the call. The LED lights up solid green.

5 Wait for the Talk Permit Tone to finish (if enabled) and speak clearly into the microphone.

6 Release the **PTT** button to listen.

7 If there is no voice activity for a predetermined period of time, the call ends.

8 You hear a short tone.

*See **Making a Selective Call** on **page 26** for details on making a Selective Call.*

Receiving an All Call

An All Call is a call from an individual radio to every radio on the channel. It is used to make important announcements requiring the user's full attention.

Procedure:

When you receive an All Call:

1. A tone sounds and the LED blinks green. Your radio unmutes and the incoming call sounds through the radio's speaker.
2. An All Call does not wait for a predetermined period of time before ending.

   If the Channel Free Indication feature is enabled, you will hear a short alert tone the moment the transmitting radio releases the **PTT** button, indicating the channel is now available for use.

You cannot respond to an All Call.

NOTE: The radio stops receiving the All Call if you switch to a different channel while receiving the call.
During an All Call, you will **not** be able to use any programmed button functions until the call ends.

Receiving and Responding to a Phone Call

Phone Call as a Private Call or Group Call

Procedure:

When you receive a Phone Call as a Private Call or Group Call:

1. The LED blinks green. Your radio unmutes and the incoming call sounds through the radio's speaker.
2. To respond, hold the radio vertically 1 to 2 inches (2.5 to 5.0 cm) from your mouth.
3. Press the **PTT** button to talk and release it to listen.
4. If there is no voice activity for a predetermined period of time, the call ends.
5. You hear a short tone.

If Phone Call capability is not enabled in your radio, your radio mutes the call.

Phone Call as an All Call

Procedure:
When you receive a Phone Call as an All Call:

The LED blinks green. Your radio unmutes and the incoming call sounds through the radio's speaker.

An All Call does not wait for a predetermined period of time before ending.

NOTE: When you receive a Phone Call as an All Call, you can respond to the call or end the call, only if an All Call type is assigned to the channel.

Making a Radio Call

You can select a channel, subscriber ID or group ID by using:

- The Channel Selector Knob.
- A programmed **One Touch Access** button.
- A programmable button – This method is for Phone Calls only (see ***Making a Phone Call with the Programmable Phone Button*** on page 27).

NOTE: Your radio must have the Privacy feature enabled on the channel to send a privacy-enabled transmission. Only target radios with the same Privacy Key OR the same Key Value and Key ID as your radio will be able to unscramble the transmission.

See ***Privacy*** on page 37 for more information.

The One Touch Access feature allows you to make a Group or Private Call to a predefined ID easily. This feature can be assigned to a short or long programmable button press.You can **ONLY** have one ID assigned to a **One Touch Access** button. Your radio can have multiple **One Touch Access** buttons programmed.

Making a Call with the Channel Selector Knob

Making a Group Call

To make a call to a group of users, your radio must be configured as part of that group.

Procedure:

1. Select the channel with the active group alias or ID. See ***Selecting a Channel*** on page 20.
   OR
   Press the programmed **One Touch Access** button.
2. Hold the radio vertically 1 to 2 inches (2.5 to 5.0 cm) from your mouth.
3. Press the **PTT** button to make the call. The LED lights up solid green.
4. Wait for the Talk Permit Tone to finish (if enabled) and speak clearly into the microphone.
   OR
   Wait for the **PTT** Sidetone to finish (if enabled) and speak clearly into the microphone.
5. Release the **PTT** button to listen. When the target radio responds, the LED blinks green.
6. If the Channel Free Indication feature is enabled, you will hear a short alert tone the moment the target radio releases the **PTT** button, indicating the channel is free for you to respond. Press the **PTT** button to respond.
   OR
   If there is no voice activity for a predetermined period of time, the call ends.

Making a Private Call

While you can receive and/or respond to a Private Call initiated by an authorized individual radio, your radio must be programmed for you to initiate a Private Call.

There are two types of Private Calls. The first type, where a radio presence check is performed prior to setting up the call, while the other sets up the call immediately.

Only **one** of these call types can be programmed to your radio by your dealer.

You hear a negative indicator tone, when you make a Private Call via the **One Touch Access** button or the Channel Selector Knob, if this feature is not enabled.

Use the Call Alert features to contact an individual radio. See ***Call Alert Operation*** on ***page 33*** for more information.

Procedure:

1. Select the channel with the active group alias or ID. See ***Selecting a Channel*** on page 20.
   OR
   Press the programmed **One Touch Access** button.
2. Hold the radio vertically 1 to 2 inches (2.5 to 5.0 cm) from your mouth.
3. Press the **PTT** button to make the call. The LED lights up solid green.
4. Wait for the Talk Permit Tone to finish (if enabled) and speak clearly into the microphone.
5. Release the **PTT** button to listen. When the target radio responds, the LED blinks green.
6. If the Channel Free Indication feature is enabled, you will hear a short alert tone the moment the target radio releases the **PTT** button, indicating the channel is free for you to respond. Press the **PTT** button to respond.
   OR
   If there is no voice activity for a predetermined period of time, the call ends.
7. You hear a short tone.

Making a Selective Call

Just like a Private Call, while you can receive and/or respond to a Selective Call initiated by an authorized individual radio, your radio must be programmed for you to initiate a Selective Call.

Procedure:

1. Select the channel with the active group alias or ID. See ***Selecting a Channel*** on page 20.
2. Hold the radio vertically 1 to 2 inches (2.5 to 5.0 cm) from your mouth.
3. Press the **PTT** button to make the call. The LED lights up solid green.
4. Wait for the Talk Permit Tone to finish (if enabled) and speak clearly into the microphone.
5. Release the **PTT** button to listen. When the target radio responds, the LED blinks green.
6. If the Channel Free Indication feature is enabled, you will hear a short alert tone the moment the target radio releases the **PTT** button, indicating the channel is free for you to respond. Press the **PTT** button to respond.
   OR
   If there is no voice activity for a predetermined period of time, the call ends.
7. You hear a short tone.

Making an All Call

This feature allows you to transmit to all users on the channel. Your radio must be programmed to allow you to use this feature.

Procedure:

1. Select the channel with the active group alias or ID. See ***Selecting a Channel*** on page 20.
2. Hold the radio vertically 1 to 2 inches (2.5 to 5.0 cm) from your mouth.
3. Press the **PTT** button to make the call. The LED lights up solid green.
4. Wait for the Talk Permit Tone to finish (if enabled) and speak clearly into the microphone.
   OR
   Wait for the **PTT** Sidetone to finish (if enabled) and speak clearly into the microphone.

Users on the channel cannot respond to an All Call.

Making a Phone Call with the Programmable Phone Button

Procedure:

1. Press the programmed **Phone** button.
2. The LED lights up solid green.
3. You hear the dialing tone of the telephone user.
4. Hold the radio vertically 1 to 2 inches (2.5 to 5.0 cm) from your mouth.
5. Press the **PTT** button to talk and release it to listen.
6. If the Channel Free Indication feature is enabled, you will hear a short alert tone the moment the target radio releases the **PTT** button, indicating the channel is free for you to respond. Press the **PTT** button to respond.
   OR
   If there is no voice activity for a predetermined period of time, the call ends.
7. You hear a short tone.

*When you press **PTT** button while in the Phone Contacts screen, a tone sounds.*

When the telephone user ends the call, a tone sounds.

During the call, when you press **One Touch Access** button with the deaccess code preconfigured, your radio attempts to end the call.

Stopping a Radio Call

This feature allows you to stop an ongoing Group or Private Call to free the channel for transmission. For example, when a radio experiences a “stuck microphone” condition where the **PTT** button is inadvertently pressed by the user.

Your radio must be programmed to allow you to use this feature.

Procedure:

While on the required channel:

1. Press the programmed **Transmit Interrupt Remote Dekey** button.
2. Wait for acknowledgment.
3. The radio sounds a positive indicator tone, indicating that the channel is now free.
   OR
   The radio sounds a negative indicator tone, indicating that the radio is unable to free the channel.

*Your radio sounds a negative indicator tone until you release the **PTT** button, if it is transmitting an interruptible call that is stopped via this feature.*

Talkaround

You can continue to communicate when your repeater is not operating, or when your radio is out of the repeater’s range but within talking range of other radios. This is called “talkaround”.

NOTE: This feature is not applicable in Capacity Plus and Linked Capacity Plus.

Procedure:

1. Press the programmed **Repeater/Talkaround** button.
2. You hear a positive indicator tone, indicating the radio is in Talkaround mode.
   OR
   You hear a negative indicator tone, indicating the radio is in Repeater mode.

The Talkaround setting is retained even after powering down.

Monitoring Features

Monitoring a Channel

Use the Monitor feature to make sure a channel is free before transmitting.

NOTE: This feature is not applicable in Capacity Plus and Linked Capacity Plus.

Procedure:

1. Press and hold the programmed **Monitor** button and listen for activity.
2. You hear radio activity or total silence, depending on how your radio is programmed.
3. When you hear “white noise” (that is, the channel is free), press the **PTT** button to talk and release it to listen. The LED lights up solid yellow.

Permanent Monitor

Use the Permanent Monitor feature to continuously monitor a selected channel for activity.

NOTE: This feature is not applicable in Capacity Plus and Linked Capacity Plus.

Procedure:

1. Press the programmed **Permanent Monitor** button.
2. Radio sounds alert tone, and the LED lights up solid yellow.
3. Press the programmed **Permanent Monitor** button to remove the radio from permanent monitor mode.
4. Radio sounds an alert tone and the LED turns off.

Advanced Features

Use this navigation guide to learn more about advanced features available with your radio:

Scan Lists . . . . . page 30
Scan . . . . . page 31
Call Indicator Settings . . . . . page 33
Call Alert Operation. . . . . page 33
Emergency Operation . . . . . page 34
Privacy . . . . . page 37
Multi-Site Controls. . . . . page 38
Lone Worker . . . . . page 39
Password Lock Features. . . . . page 40
Bluetooth. . . . . page 41
Auto-Range Transponder System (ARTS) . . . . . page 42
Over-the-Air Programming (OTAP). . . . . page 43
Utilities. . . . . page 43

Scan Lists

Scan lists are created and assigned to individual channels/groups. Your radio scans for voice activity by cycling through the channel/group sequence specified in the scan list for the current channel.

Your radio supports up to 250 scan lists, with a maximum of 16 members in a list. Each scan list shall support a mixture of both analog and digital entries.

NOTE: This feature is not applicable in Capacity Plus and Linked Capacity Plus.

Scan

When you start a scan, your radio cycles through the programmed scan list for the current channel looking for voice activity.The LED blinks yellow.

During a dual mode scan, if you are on a digital channel, and your radio locks onto an analog channel, it automatically switches from digital mode to analog mode for the duration of the call. This is also true for the reverse.

There are two types of scans:

- **Main Channel Scan (Manual)**: Your radio scans all the channels/groups in your scan list. On entering scan, your radio may – depending on the settings – automatically start on the last scanned “active” channel/group or on the channel where scan was initiated.
- **Auto Scan (Automatic)**: Your radio automatically starts scanning when you select a channel/group that has Auto Scan enabled.

NOTE: This feature is not applicable in Capacity Plus and Linked Capacity Plus.

Starting and Stopping Scan

Procedure:

1. Press the programmed **Scan** button.
   OR
   Use the Channel Selector Knob to select a channel with Auto Scan enabled.
2. When Scan is enabled, the LED blinks yellow and you hear a positive indicator tone.
   OR
   When Scan is disabled, the LED turns off and you hear a negative indicator tone.

Responding to a Transmission During a Scan

During scanning, your radio stops on a channel/group where activity is detected. The radio stays on that channel for a programmed time period known as “hang time”.

Procedure:

1. Hold the radio vertically 1 to 2 inches (2.5 to 5.0 cm) from your mouth.

   If the Channel Free Indication feature is enabled, you will hear a short alert tone the moment the transmitting radio releases the **PTT** button, indicating the channel is free for you to respond.

2 Press the **PTT** button during hang time. The LED lights up solid green.

3 Wait for the Talk Permit Tone to finish (if enabled) and speak clearly into the microphone.
OR
Wait for the **PTT** Sidetone to finish (if enabled) and speak clearly into the microphone.

4 Release the **PTT** button to listen.

5 If you do not respond within the hang time, the radio returns to scanning other channels/groups.

Deleting a Nuisance Channel

If a channel continually generates unwanted calls or noise (termed a “nuisance” channel), you can temporarily remove the unwanted channel from the scan list.

This capability does not apply to the channel designated as the Selected Channel.

Procedure:

1 When your radio “locks on to” an unwanted or nuisance channel, press the programmed **Nuisance Channel Delete** button until you hear a tone.

2 Release the **Nuisance Channel Delete** button. The nuisance channel is deleted.

Restoring a Nuisance Channel

Procedure:
To restore the deleted nuisance channel, do **one** of the following:

- Turn the radio off and power it on again, **OR**
- Stop and restart a scan via the programmed **Scan** button, **OR**
- Change the channel via the Channel Selector Knob.

Vote Scan

Vote Scan provides you with wide area coverage in areas where there are multiple base stations transmitting identical information on different analog channels.

Your radio scans analog channels of multiple base stations and performs a voting process to select the strongest received signal. Once that is established, your radio unmutes to transmissions from that base station.

The LED blinks yellow during the Vote Scan operation.

To respond to a transmission during a Vote Scan, follow the same procedures as Responding to a Transmission During a Scan on page 31.

Call Indicator Settings

You can turn on or off the ringing tones for a received Private Call (see ***Turning Radio Tones/Alerts On or Off*** on page 45).

Escalating Alarm Tone Volume

Your radio can be programmed by your dealer to continually alert you when a radio call remains unanswered. This is done by automatically increasing the alarm tone volume over time.

This feature is known as Escalert.

Call Alert Operation

Call Alert paging enables you to alert a specific radio user to call you back when they are able to do so. This feature is accessible via a programmed **One Touch Access** button.

Receiving and Responding to a Call Alert

Procedure:

When you receive a Call Alert page:

1. You hear a repetitive tone. The LED blinks yellow.
2. Press the **PTT** button within four (4) seconds of receiving a Call Alert page to respond to the Private Call.

Making a Call Alert with the One Touch Access Button

Procedure:

1. Press the programmed **One Touch Access** button to make a Call Alert to the predefined ID.
2. The LED lights up solid green when your radio is sending the Call Alert.
3. If the Call Alert acknowledgement is received, two chirps sound.
   OR
   If the Call Alert acknowledgement is not received, a low-pitch tone sounds.

Emergency Operation

An Emergency Alarm is used to indicate a critical situation. You are able to initiate an Emergency at any time, in any state, even when there is activity on the current channel.

Your dealer can set the duration of a button press for the programmed **Emergency** button, except for long press, which is similar with all other buttons:

- Short press – Between 0.05 seconds and 0.75 seconds
- Long press – Between 1.00 second and 3.75 seconds

The **Emergency** button is assigned with the Emergency On/Off feature. Check with your dealer for the assigned operation of the **Emergency** button.

*If short press the **Emergency** button is assigned to turn on the Emergency mode, then long press the **Emergency** button is assigned to exit the Emergency mode.*

*If long press the **Emergency** button is assigned to turn on the Emergency mode, then short press the **Emergency** button is assigned to exit the Emergency mode.*

Your radio supports **three** Emergency Alarms:

- Emergency Alarm
- Emergency Alarm with Call
- Emergency Alarm with Voice to Follow

In addition, each alarm has the following types:

- **Regular** – Radio transmits an alarm signal and shows audio and/or visual indicators.
- **Silent** – Radio transmits an alarm signal without any audio or visual indicators. Radio receives calls without any sound through the radio's speaker, until you press the **PTT** button to initiate the call.
- **Silent with Voice** – Radio transmits an alarm signal without any audio or visual indicators, but allow incoming calls to sound through the radio's speaker.

Only **one** of the Emergency Alarms above can be assigned to the programmed **Emergency** button.

Sending an Emergency Alarm

This feature allows you to send an Emergency Alarm, a non-voice signal, which triggers an alert indication on a group of radios.

Procedure:

1. Press the programmed **Emergency On** button.
2. The LED lights up solid green.

3 When an Emergency Alarm acknowledgment is received, the Emergency tone sounds. The LED blinks green.
OR
If your radio does not receive an Emergency Alarm acknowledgement, and after all retries have been exhausted, a low-pitch tone sounds.

4 Radio exits the Emergency Alarm mode.

If your radio is set to Silent, it will not display any audio or visual indicators during Emergency mode.

Sending an Emergency Alarm with Call

This feature allows you to send an Emergency Alarm to a group of radios. Upon acknowledgement by a radio within the group, the group of radios can communicate over a programmed Emergency channel.

Procedure:

1 Press the programmed **Emergency On** button.

2 The LED lights up solid green.

3 When an Emergency Alarm acknowledgment is received, the Emergency tone sounds. The LED blinks green.

4 Hold the radio vertically 1 to 2 inches (2.5 to 5.0 cm) from your mouth.

5 Press the **PTT** button to make the call. The LED lights up solid green.

6 Wait for the Talk Permit Tone to finish (if enabled) and speak clearly into the microphone.
OR
Wait for the **PTT** Sidetone to finish (if enabled) and speak clearly into the microphone.

7 Release the **PTT** button to listen.

8 When the channel is free for you to respond, a short alert tone sounds (if the Channel Free Indication feature is enabled). Press the **PTT** button to respond.
OR
Once your call ends, press **Emergency Off** button to exit the Emergency mode.

*If your radio is set to Silent, it will not display any audio or visual indicators during Emergency mode, or allow any received calls to sound through the radio's speaker, until you press the **PTT** button to initiate the call.*

*If your radio is set to Silent with Voice, it will not display any audio or visual indicators during Emergency mode, but allow incoming calls to sound through the radio's speaker. The indicators will only appear once you press the **PTT** button to initiate, or respond to, the call.*

Sending an Emergency Alarm with Voice to Follow

This feature allows you to send an Emergency Alarm to a group of radios. Your radio's microphone is automatically activated, allowing you to communicate with the group of radios without pressing the **PTT** button.

This activated microphone state is also known as "hot mic".

If you press the **PTT** button during the programmed hot mic transmission period, the radio ignores the **PTT** press and remains in Emergency mode.

NOTE: If you press the **PTT** button during hot mic, and continue to press it after the hot mic duration expires, the radio continues to transmit until you release the **PTT** button.

Procedure:

1. Press the programmed **Emergency On** button.
2. The LED lights up solid green.
3. Once a tone sounds, speak clearly into the microphone.
   When hot mic has been enabled, the radio automatically transmits without a **PTT** press until the hot mic duration expires.
   While transmitting, the LED lights up solid green.
4. The radio automatically stops transmitting when:
   Once the cycling duration between hot mic and receiving calls expires, if Emergency Cycle Mode is enabled.
   OR
   Once the hot mic duration expires, if Emergency Cycle Mode is disabled.
5. To transmit again, press the **PTT** button.
   OR
   Press the programmed **Emergency Off** button to exit the Emergency mode.

*If your radio is set to Silent, it will not display any audio or visual indicators during Emergency mode, or allow any received calls to sound through the radio's speaker, until the programmed hot mic transmission period is over, and you press the **PTT** button.*

*If your radio is set to Silent with Voice, it will not display any audio or visual indicators during Emergency mode when you are making the call with hot mic, but allow sound through the radio's speaker when the target radio responds after the programmed hot mic transmission period is over. The indicators will only appear when you press the **PTT** button.*

NOTE: If the Emergency Alarm request fails, the radio does not retry to send the request, and enters the hot mic state directly.

Reinitiating an Emergency Mode

NOTE: This feature is only applicable to the radio sending the Emergency Alarm.

There are two instances where this can happen:

- You change the channel while the radio is in Emergency mode. This exits the Emergency mode. If Emergency Alarm is enabled on this new channel, the radio reinitiates Emergency.
- You press the programmed **Emergency On** button during an Emergency initiation/transmission state. This causes the radio to exit this state, and to reinitiate Emergency.

Exiting an Emergency Mode

NOTE: This feature is only applicable to the radio sending the Emergency Alarm.

Your radio exits Emergency mode when **one** of the following occurs:

- Emergency Alarm acknowledgement is received (for **Emergency Alarm** only), **OR**
- An Emergency Exit Telegram is received, **OR**
- All retries to send the alarm have been exhausted, **OR**
- The **Emergency Off** button is pressed.
- Turn the radio off and then power it on again if your radio has been programmed to remain on the Emergency Revert channel even after acknowledgement is received.

NOTE: If your radio is powered off, it exits the Emergency mode. The radio will not reinitiate the Emergency mode automatically when it is turned on again.

Privacy

If enabled, this feature helps to prevent eavesdropping by unauthorized users on a channel by the use of a software-based scrambling solution. The signaling and user identification portions of a transmission are not scrambled.

Your radio must have privacy enabled on the channel to send a privacy-enabled transmission, although this is not a necessary requirement for receiving a transmission. While on a privacy-enabled channel, the radio is still able to receive clear (unscrambled) transmissions.

Your radio supports two types of privacy:

- Basic Privacy
- Enhanced Privacy

Only **ONE** of the privacy types above can be assigned to the radio.

To unscramble a privacy-enabled call or data transmission, your radio must be programmed to have the same Privacy Key (for Basic Privacy), OR the same Key Value and Key ID (for Enhanced Privacy) as the transmitting radio.

If your radio receives a scrambled call that is of a different Privacy Key, OR a different Key Value and Key ID, you will either hear a garbled transmission (Basic Privacy) or nothing at all (Enhanced Privacy).

The LED lights up solid green while the radio is transmitting and blinks green rapidly when the radio is receiving an ongoing privacy-enabled transmission.

NOTE: Some radio models may not offer this Privacy feature. Check with your dealer or system administrator for more information.

Procedure:
Press the programmed **Privacy** button to toggle privacy on or off.

Multi-Site Controls

These features are applicable when your current radio channel is part of an IP Site Connect or Linked Capacity Plus configuration.

NOTE: See **IP Site Connect** on page 13 and **Linked Capacity Plus** on page 15 for more details about these configurations.

Starting an Automatic Site Search

NOTE: The radio **only** scans for a new site if the current signal is weak or when the radio is unable to detect any signal from the current site. If the RSSI value is strong, the radio remains on the current site.

Procedure:

1. Press the programmed **Site Lock On/Off** button.
2. A tone sounds.
3. The LED blinks yellow rapidly when the radio is actively searching for a new site, and turns off once the radio locks on to a site.

*The radio also performs an automatic site search (site is unlocked) during a **PTT** button press or data transmission if the current channel, multi-site channel with an attached roam list, is out of range.*

Stopping an Automatic Site Search

When the radio is actively searching for a new site:

Procedure:

1. Press the programmed **Site Lock On/Off** button.
2. A tone sounds and the LED turns off.

Starting a Manual Site Search

Procedure:

1. Press the programmed **Manual Site Roam** button.
2. A tone sounds and the LED blinks green.
3. You hear a positive indicator tone and the LED turns off, indicating the radio is locked on to a site.
   OR
   You hear a negative indicator tone and the LED turns off, indicating the radio is unable to lock on to a site.

Lone Worker

This feature prompts an emergency to be raised if there is no user activity, such as any radio button press or activation of the channel selector, for a predefined time.

Following no user activity for a programmed duration, the radio pre-warns the user via an audio indicator once the inactivity timer expires.

If there is still no acknowledgment by the user before the predefined reminder timer expires, the radio initiates an Emergency Alarm.

Only **one** of the following Emergency Alarms is assigned to this feature:

- Emergency Alarm
- Emergency Alarm with Call
- Emergency Alarm with Voice to Follow

The radio remains in the emergency state allowing voice messages to proceed until action is taken. See ***Emergency Operation*** on page 34 on ways to exit Emergency.

NOTE: This feature is limited to radios with this function enabled. Check with your dealer or system administrator for more information.

Password Lock Features

If enabled, this feature allows you to access your radio via password upon powering up. Use the Channel Selector Knob and the three Side Buttons to enter password (see ***Linked Capacity Plus page 15*** on page 8):

- Channel Selector Knob positions 1 to 9 represent numbers 1 to 9, and position 10 represents number 0.
- Side Buttons 1 to 2 represent numbers 1 to 2.

Accessing the Radio from Password

Procedure:

1. Power up the radio.
2. You hear a continuous tone.
3. Use the **Channel Selector Knob** to enter the first digit of the password.
4. Press Side Button 1 or 2 to enter each digit of the remaining three digits of the password. You hear a positive indicator tone for each Side Button press.
   When the second digit of the password is entered, your radio ignores any **Channel Selector Knob** position change.
5. When the last digit of the four-digit password is entered, your radio automatically checks the validity of the password.
   If the password is correct:
   Your radio proceeds to power up. See ***Powering Up the Radio*** on page 6.
   OR
   If the password is incorrect:
   You hear a continuous tone. Repeat Steps 1 to 3.
   OR
   After the third incorrect password, your radio enters into locked state. A tone sounds and the LED double blinks yellow.

*Your radio enters into locked state for 15 minutes, and responds to inputs from **On/Off/Volume Control Knob**.*

NOTE: The radio is unable to receive any call, including emergency calls, in locked state.

Unlocking the Radio from Locked State

Procedure:
Wait for 15 minutes. Repeat Steps 1 to 4 in ***Accessing the Radio from Password*** on page 40.
OR
Power up the radio, if you have powered down the radio during locked state:

1. A tone sounds and the LED double blinks yellow.
2. Wait for 15 minutes. Repeat Steps 1 to 4 in ***Accessing the Radio from Password*** on page 40.

Your radio restarts the 15 minute timer for locked state when you power up.

Bluetooth

This feature allows you to use your radio with a Bluetooth-enabled device (accessory) via a Bluetooth connection. Your radio supports both Motorola and COTS (Commercially available Off-The-Shelf) Bluetooth-enabled devices.

Bluetooth operates within a range of 10 meters line of sight. This is an unobstructed path between your radio and your Bluetooth-enabled device.

It is not recommended that you leave your radio behind and expect your Bluetooth-enabled device to work with a high degree of reliability when they are separated.

At the fringe areas of reception, both voice and tone quality will start to sound "garbled" or "broken". To correct this problem, simply position your radio and Bluetooth-enabled device closer to each other (within the 10-meter defined range) to re-establish clear audio reception. Your radio's Bluetooth function has a maximum power of 2.5 mW (4 dBm) at the 10-meter range.

Your radio can support up to 3 simultaneous Bluetooth connections with Bluetooth-enabled devices of unique types. For example, a headset, a scanner, and a PTT-Only Device (POD). Multiple connections with Bluetooth-enabled devices of the same type are not supported.

Refer to your respective Bluetooth-enabled device's user manual for more details on your Bluetooth-enabled device's full capabilities.

Finding and Connecting to a Bluetooth Device

Procedure:

1. Turn on your Bluetooth-enabled device and place it in pairing mode. Refer to respective Bluetooth-enabled device's user manual.
2. On your radio, press the programmed **Bluetooth Connect** button.
3. A tone sounds and LED blinks yellow.
4. Your Bluetooth-enabled device may require additional steps to complete the pairing. Refer to respective Bluetooth-enabled device's user manual.
5. If successful, a positive tone sounds.
   OR
   If unsuccessful, a negative indicator tone sounds.

Do not turn off your Bluetooth-enabled device during the finding and connecting operation as this cancels the operation.

Your radio connects to the Bluetooth-enabled device within range with either the strongest signal strength, or to one which it has connected to before in a prior session.

NOTE: A pin code may be required to be programmed in your radio before it can pair with some devices. Contact your dealer for more information.

Disconnecting from a Bluetooth Device

Procedure:

1. Press the programmed **Bluetooth Disconnect** button.
2. A positive indicator tone sounds when disconnected.

Switching Audio Route

You can toggle audio routing between internal radio speaker and external Bluetooth-enabled accessory.

Procedure:

1. Press the programmed **Bluetooth Audio Switch** button.

A tone sounds when the audio route has switched.

Auto-Range Transponder System (ARTS)

ARTS is an analog-only feature designed to inform you when your radio is out-of-range of other ARTS-equipped radios.

ARTS-equipped radios transmit or receive signals periodically to confirm that they are within range of each other. Your dealer can program your radio to transmit or receive the ARTS signal.

Your radio provides indications of states as follows:

- **First-Time Alert** – A tone sounds.
- **ARTS-in-Range Alert** – A tone sounds, if programmed.
- **ARTS-Out-of-Range Alert** – A tone sounds, and the LED rapidly blinks red.

Over-the-Air Programming (OTAP)

Your radio can be updated by your dealer remotely, via OTAP, without needing to be physically connected. Additionally, some settings can also be configured via OTAP.

While undergoing OTAP, the LED blinks green.

NOTE: When the radio is receiving high volume data, the channel is busy. A PTT button press at this time causes a negative tone to sound.

Once the programming is complete, a tone sounds, and your radio restarts (powers off and on again).

Utilities

Setting the Squelch Level

You can adjust your radio's squelch level to filter out unwanted calls with low signal strength or channels that have a higher than normal background noise.

Settings: Normal is the default. **Tight** filters out (unwanted) calls and/or background noise. However, calls from remote locations may also be filtered out.

Procedure:

1. Press the programmed **Squelch** button.
2. You hear a positive indicator tone, indicating the radio is operating in tight squelch.
   OR
   You hear a negative indicator tone, indicating the radio is operating in normal squelch.

Setting the Power Level

You can toggle your radio's power setting between high or low for each channel.

Settings: **High** enables communication with radios located at a considerable distance from you. **Low** enables communication with radios in closer proximity.

Procedure:

1. Press the programmed **Power Level** button.
2. You hear a positive indicator tone, indicating the radio is transmitting at low power.
   OR
   You hear a negative indicator tone, indicating the radio is transmitting at high power.

Turning the Voice Operating Transmission (VOX) Feature On or Off

This feature allows you to initiate a hands-free voice activated call on a programmed channel. The radio automatically transmits, for a programmed period, whenever the microphone on the VOX-capable accessory detects voice.

Pressing the **PTT** button during radio operation will disable VOX. To re-enable VOX, do **one** of the following:

- Turn the radio off and power it on again, **OR**
- Change the channel via the Channel Selector Knob, **OR**
- Follow the procedure below.

NOTE: Turning this feature on or off is limited to radios with this function enabled. Check with your dealer or system administrator for more information.

Procedure:
Press the programmed **VOX** button to toggle the feature on or off.

If the Talk Permit Tone feature is enabled, use a trigger word to initiate the call. Wait for the Talk Permit Tone to finish before speaking clearly into the microphone.

Turning the Acoustic Feedback Suppressor Feature On or Off

This feature allows you to minimize acoustic feedback in received calls.

Procedure:

1. Press the programmed **AF Suppressor** button.
2. You hear a positive indicator tone, indicating that Acoustic Feedback Suppressor is now enabled.
   OR
   You hear a negative indicator tone, indicating that the radio is unable to activate Acoustic Feedback Suppressor.

Turning Radio Tones/Alerts On or Off

You can enable and disable all radio tones and alerts (except for the incoming Emergency alert tone) if needed.

Procedure:

1. Press the programmed **All Tones/Alerts** button.
2. You hear a positive indicator tone, indicating all tones and alerts are on.
   OR
   You hear a negative indicator tone, indicating all tones and alerts are off.

Checking the Battery Strength

You can check how much battery power you have left.

Settings: The LED Indicator in solid yellow indicates fair battery charge while solid green indicates full charge of the battery.

Procedure:
Press the programmed **Battery Strength** button to view the battery strength via the LED Indicator.

Voice Announcement

This feature enables the radio to audibly indicate the current Zone or Channel the user has just assigned, or programmable button press. This audio indicator can be customized per customer requirements. This is typically useful when the user is in a difficult condition to read the content shown on the display.

Use the following features to toggle Voice Announcement on or off.

Procedure:

Press the programmed **Voice Announcement** button.

GPS

Global Positioning System (GPS) is a satellite navigation system that determines the radio's precise location.

Procedure:

Press the programmed **GPS** button to toggle the feature on or off.

Intelligent Audio

Your radio automatically adjusts its audio volume to overcome current background noise in the environment, inclusive of both stationary and non-stationary noise sources. This feature is a Receive-only feature and does not affect Transmit audio.

NOTE: This feature is not applicable during a Bluetooth session.

Use the following features to toggle Intelligent Audio on or off.

Procedure:

Press the programmed **Intelligent Audio** button to toggle the feature on or off.

Batteries and Chargers Warranty

The Workmanship Warranty

The workmanship warranty guarantees against defects in workmanship under normal use and service.

All MOTOTRBO Batteries	Two (2) Years
IMPRES Chargers (Single-Unit and Multi-Unit, Non-Display)	Two (2) Years
IMPRES Chargers (Multi-Unit with Display)	One (1) Year

The Capacity Warranty

The capacity warranty guarantees 80% of the rated capacity for the warranty duration.

Nickel Metal-Hydride (NiMH) or Lithium-Ion (Li-Ion) Batteries	12 Months
IMPRES Batteries, When Used Exclusively with IMPRES Chargers	18 Months

Limited Warranty

MOTOROLA COMMUNICATION PRODUCTS

I. WHAT THIS WARRANTY COVERS AND FOR HOW LONG:

MOTOROLA SOLUTIONS, INC. (“MOTOROLA”) warrants the MOTOROLA manufactured Communication Products listed below (“Product”) against defects in material and workmanship under normal use and service for a period of time from the date of purchase as scheduled below:

DP Series Digital Portable Radios	Two (2) Years
Product Accessories (Excluding Batteries, Chargers and Mag One Accessories)	One (1) Year
Mag One Accessories	Six (6) Months

MOTOROLA, at its option, will at no charge either repair the Product (with new or reconditioned parts), replace it (with a new or reconditioned Product), or refund the purchase price of the Product during the warranty period provided it is returned in accordance with the terms of this warranty. Replaced parts or boards are warranted for the balance of the original applicable warranty period. All replaced parts of Product shall become the property of MOTOROLA.

This express limited warranty is extended by MOTOROLA to the original end user purchaser only and is not assignable or transferable to any other party. This is the complete warranty for the Product manufactured by MOTOROLA. MOTOROLA assumes no obligations or liability for additions or modifications to this warranty unless made in writing and signed by an officer of MOTOROLA.

Unless made in a separate agreement between MOTOROLA and the original end user purchaser, MOTOROLA does not warrant the installation, maintenance or service of the Product.

MOTOROLA cannot be responsible in any way for any ancillary equipment not furnished by MOTOROLA which is attached to or used in connection with the Product, or for operation of the Product with any ancillary equipment, and all such equipment is expressly excluded from this warranty. Because each system which may use the Product is unique, MOTOROLA disclaims liability for range, coverage, or operation of the system as a whole under this warranty.

II. GENERAL PROVISIONS:

This warranty sets forth the full extent of MOTOROLA'S responsibilities regarding the Product. Repair, replacement or refund of the purchase price, at MOTOROLA’s option, is the exclusive remedy. THIS WARRANTY IS GIVEN IN LIEU OF ALL OTHER EXPRESS WARRANTIES. IMPLIED WARRANTIES, INCLUDING WITHOUT LIMITATION, IMPLIED WARRANTIES OF MERCHANTABILITY AND FITNESS FOR A PARTICULAR PURPOSE, ARE LIMITED TO THE DURATION OF THIS LIMITED WARRANTY. IN NO EVENT SHALL MOTOROLA BE LIABLE FOR DAMAGES IN EXCESS OF THE PURCHASE PRICE OF THE PRODUCT, FOR ANY LOSS OF USE, LOSS OF TIME, INCONVENIENCE, COMMERCIAL LOSS, LOST PROFITS OR SAVINGS OR OTHER INCIDENTAL, SPECIAL OR

CONSEQUENTIAL DAMAGES ARISING OUT OF THE USE OR INABILITY TO USE SUCH PRODUCT, TO THE FULL EXTENT SUCH MAY BE DISCLAIMED BY LAW.

III. STATE LAW RIGHTS:

SOME STATES DO NOT ALLOW THE EXCLUSION OR LIMITATION OF INCIDENTAL OR CONSEQUENTIAL DAMAGES OR LIMITATION ON HOW LONG AN IMPLIED WARRANTY LASTS, SO THE ABOVE LIMITATION OR EXCLUSIONS MAY NOT APPLY.

This warranty gives specific legal rights, and there may be other rights which may vary from state to state.

IV. HOW TO GET WARRANTY SERVICE:

You must provide proof of purchase (bearing the date of purchase and Product item serial number) in order to receive warranty service and, also, deliver or send the Product item, transportation and insurance prepaid, to an authorized warranty service location. Warranty service will be provided by MOTOROLA through one of its authorized warranty service locations. If you first contact the company which sold you the Product (e.g., dealer or communication service provider), it can facilitate your obtaining warranty service.

V. WHAT THIS WARRANTY DOES NOT COVER:

A) Defects or damage resulting from use of the Product in other than its normal and customary manner.

B) Defects or damage from misuse, accident, water, or neglect.

C) Defects or damage from improper testing, operation, maintenance, installation, alteration, modification, or adjustment.

D) Breakage or damage to antennas unless caused directly by defects in material workmanship.

E) A Product subjected to unauthorized Product modifications, disassembles or repairs (including, without limitation, the addition to the Product of non-MOTOROLA supplied equipment) which adversely affect performance of the Product or interfere with MOTOROLA's normal warranty inspection and testing of the Product to verify any warranty claim.

F) Product which has had the serial number removed or made illegible.

G) Rechargeable batteries if:

(1) any of the seals on the battery enclosure of cells are broken or show evidence of tampering.

(2) the damage or defect is caused by charging or using the battery in equipment or service other than the Product for which it is specified.

H) Freight costs to the repair depot.

I) A Product which, due to illegal or unauthorized alteration of the software/firmware in the Product, does not function in accordance with MOTOROLA’s published specifications or the FCC certification labeling in effect for the Product at the time the Product was initially distributed from MOTOROLA.

J) Scratches or other cosmetic damage to Product surfaces that does not affect the operation of the Product.

K) Normal and customary wear and tear.

VI. PATENT AND SOFTWARE PROVISIONS:

MOTOROLA will defend, at its own expense, any suit brought against the end user purchaser to the extent that it is based on a claim that the Product or parts infringe a United States patent, and MOTOROLA will pay those costs and damages finally awarded against the end user purchaser in any such suit which are attributable to any such claim, but such defense and payments are conditioned on the following:

A) that MOTOROLA will be notified promptly in writing by such purchaser of any notice of such claim;

B) that MOTOROLA will have sole control of the defense of such suit and all negotiations for its settlement or compromise; and

C) should the Product or parts become, or in MOTOROLA's opinion be likely to become, the subject of a claim of infringement of a United States patent, that such purchaser will permit MOTOROLA, at its option and expense, either to procure for such purchaser the right to continue using the Product or parts or to replace or modify the same so that it becomes non-infringing or to grant such purchaser a credit for the Product or parts as depreciated and accept its return. The depreciation will be an equal amount per year over the lifetime of the Product or parts as established by MOTOROLA.

MOTOROLA will have no liability with respect to any claim of patent infringement which is based upon the combination of the Product or parts furnished hereunder with software, apparatus or devices not furnished by MOTOROLA, nor will MOTOROLA have any liability for the use of ancillary equipment or software not furnished by MOTOROLA which is attached to or used in connection with the Product. The foregoing states the entire liability of MOTOROLA with respect to infringement of patents by the Product or any parts thereof.

Laws in the United States and other countries preserve for MOTOROLA certain exclusive rights for copyrighted MOTOROLA software such as the exclusive rights to reproduce in copies and distribute copies of such MOTOROLA software. MOTOROLA software may be used in only the Product in which the software was originally embodied and such software in such Product may not be replaced, copied, distributed, modified in any way, or used to produce any derivative thereof. No other use including, without limitation, alteration, modification, reproduction, distribution, or reverse engineering of such MOTOROLA software or exercise of rights in such MOTOROLA software is permitted. No license is granted by implication, estoppel or otherwise under MOTOROLA patent rights or copyrights.

VII. GOVERNING LAW:

This Warranty is governed by the laws of the State of Illinois, U.S.A.

MOTOROLA, MOTO, MOTOROLA SOLUTIONS and
the Stylized M logo are trademarks or registered trademarks
of Motorola Trademark Holdings, LLC and are used under
license.
All other trademarks are the property of their respective owners.
© 2013 Motorola Solutions, Inc. All rights reserved.
June 2013.
www.motorolasolutions.com/mototrbo

68012009018-A